MARCUS

Marcus Transformer LTD
Phone: 1-800-267-7376
Fax: 1-866-205-7526
Email: Info@marcustransformer.com

TECHNICAL DATA
SINGLE PHASE CONTROL TRANSFORMER

DESCRIPTION

MODEL	MO1K5A
Type	Open
VA	1500
Primary (Volts)	120 / 240
Secondary (Volts)	12 / 24
Input /Output Amps	12.5 , 6.25 / 125.0 , 62.5
Temperature Rise	100°C
Insulation Class	F (155°C)
Frequency	50 / 60Hz
Polarity	additive
Noise level	less than 40DB
Winding	Copper
Approvals	CE compliant UL listed CSA approved

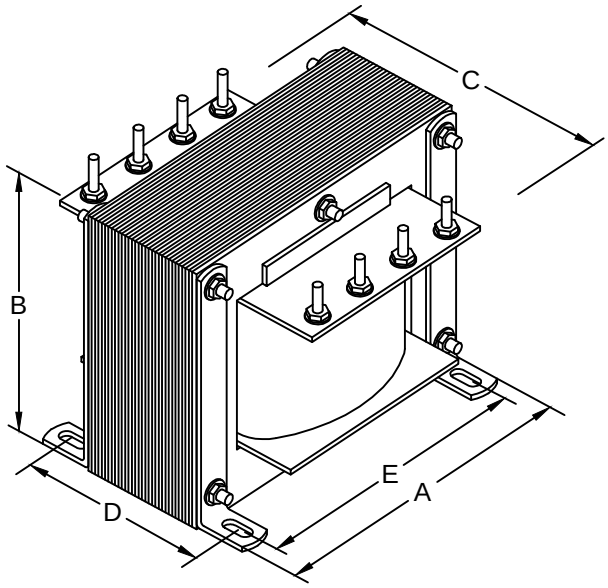

CONNECTION DIAGRAM

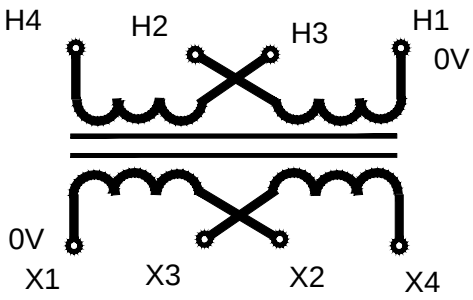

WIRING CONNECTION

PRIMARY :

VOLTS	INTERCONNECT:	CONNECT LINES TO :
120	H1-H3 AND H2-H4	H1-H4
240	H2-H3	H1-H4

SECONDARY :

VOLTS	INTERCONNECT:	CONNECT LINES TO :
12	X1-X3 AND X2-X4	X1-X4
24	X2-X3	X1-X4

DIMENSIONS INCHES / MM

VA	A	B	C	D	E	MOUNTING HOLES INCHES / MM	SHIP WEIGHT LBS / KG
1500	7.50 190.5	6.25 158.8	6.75 171.5	3.50 88.9	6.75 171.5	0.31 x 0.688 7.9 x 17.5	36.0 16.5

Notes:

MARCUS

Marcus Transformer LTD
Phone: 1-800-267-7376
Fax: 1-866-205-7526
Email: Info@marcustransformer.com

TECHNICAL DATA
SINGLE PHASE CONTROL TRANSFORMER

DESCRIPTION

MODEL	MO1K5B
Type	Open
VA	1500
Primary (Volts)	120 / 240
Secondary (Volts)	16 / 32
Input /Output Amps	12.5 , 6.25 / 93.75 , 46.88
Temperature Rise	100°C
Insulation Class	F (155°C)
Frequency	50 / 60Hz
Polarity	additive
Noise level	less than 40DB
Winding	Copper
Approvals	CE compliant UL listed CSA approved

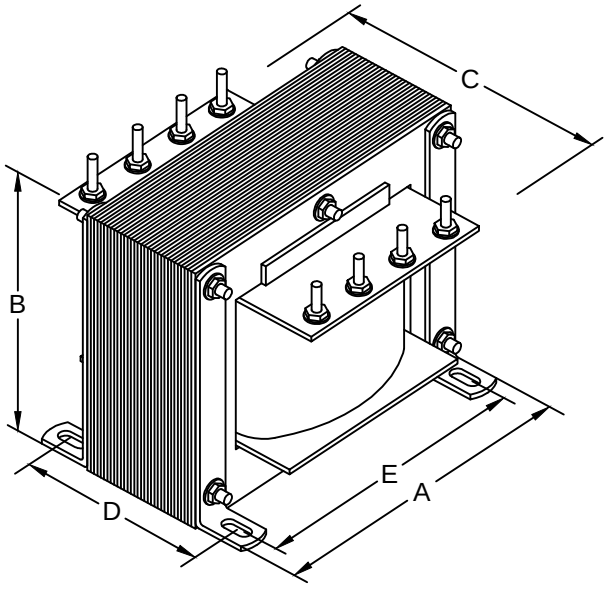

CONNECTION DIAGRAM

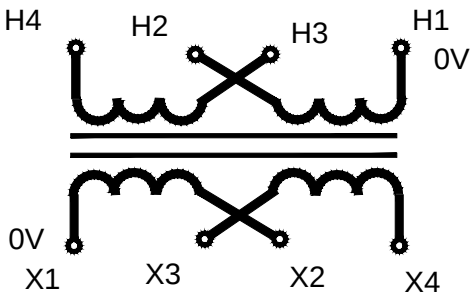

WIRING CONNECTION

PRIMARY :		
VOLTS	INTERCONNECT:	CONNECT LINES TO :
120	H1-H3 AND H2-H4	H1-H4
240	H2-H3	H1-H4
SECONDARY :		
VOLTS	INTERCONNECT:	CONNECT LINES TO :
16	X1-X3 AND X2-X4	X1-X4
32	X2-X3	X1-X4

DIMENSIONS INCHES / MM

VA	A	B	C	D	E	MOUNTING HOLES INCHES / MM	SHIP WEIGHT LBS / KG
1500	7.50 190.5	6.25 158.8	6.75 171.5	3.50 88.9	6.75 171.5	0.31 x 0.688 7.9 x 17.5	36.0 16.5

Notes:

MARCUS

Marcus Transformer LTD
Phone: 1-800-267-7376
Fax: 1-866-205-7526
Email: Info@marcustransformer.com

TECHNICAL DATA
SINGLE PHASE CONTROL TRANSFORMER

DESCRIPTION

MODEL	MO1K5C
Type	Open
VA	1500
Primary (Volts)	120 / 240
Secondary (Volts)	120 / 240
Input /Output Amps	12.5 , 6.25 / 12.5 , 6.25
Temperature Rise	100°C
Insulation Class	F (155°C)
Frequency	50 / 60Hz
Polarity	additive
Noise level	less than 40DB
Winding	Copper
Approvals	CE compliant UL listed CSA approved

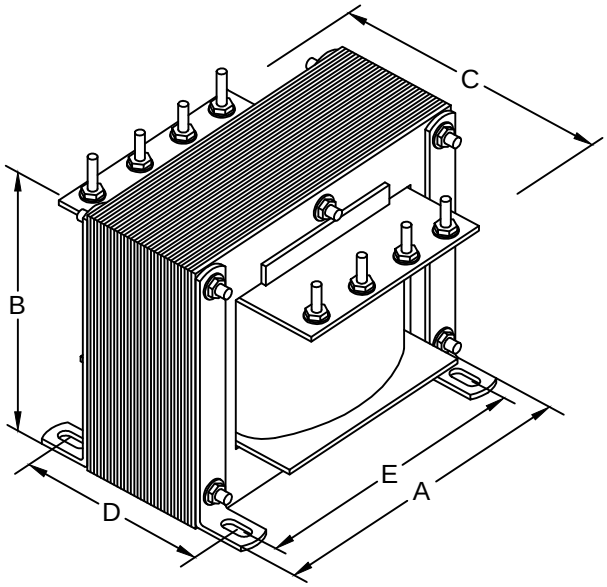

CONNECTION DIAGRAM

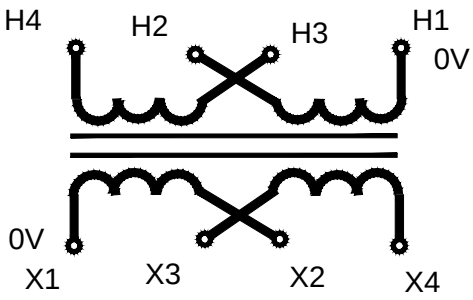

WIRING CONNECTION

PRIMARY :		
VOLTS	INTERCONNECT:	CONNECT LINES TO :
120	H1-H3 AND H2-H4	H1-H4
240	H2-H3	H1-H4
SECONDARY :		
VOLTS	INTERCONNECT:	CONNECT LINES TO :
120	X1-X3 AND X2-X4	X1-X4
240	X2-X3	X1-X4

DIMENSIONS INCHES / MM

VA	A	B	C	D	E	MOUNTING HOLES INCHES / MM	SHIP WEIGHT LBS / KG
1500	7.50 190.5	6.25 158.8	6.75 171.5	3.50 88.9	6.75 171.5	0.31 x 0.688 7.9 x 17.5	36.0 16.5

Notes:

MARCUS

Marcus Transformer LTD
Phone: 1-800-267-7376
Fax: 1-866-205-7526
Email: Info@marcustransformer.com

TECHNICAL DATA
SINGLE PHASE CONTROL TRANSFORMER

DESCRIPTION

MODEL	MO1K5D
Type	Open
VA	1500
Primary (Volts)	208 / 416
Secondary (Volts)	12 / 24
Input /Output Amps	7.21 , 3.61 / 125.0 , 62.5
Temperature Rise	100°C
Insulation Class	F (155°C)
Frequency	50 / 60Hz
Polarity	additive
Noise level	less than 40DB
Winding	Copper
Approvals	CE compliant UL listed CSA approved

CONNECTION DIAGRAM

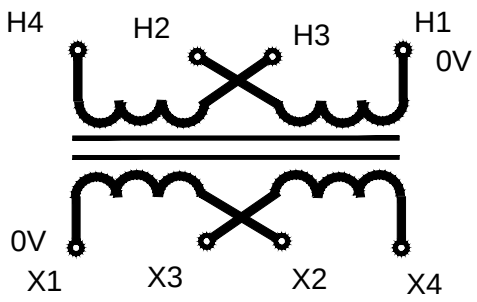

WIRING CONNECTION

PRIMARY :

VOLTS	INTERCONNECT:	CONNECT LINES TO :
208	H1-H3 AND H2-H4	H1-H4
416	H2-H3	H1-H4

SECONDARY :

VOLTS	INTERCONNECT:	CONNECT LINES TO :
12	X1-X3 AND X2-X4	X1-X4
24	X2-X3	X1-X4

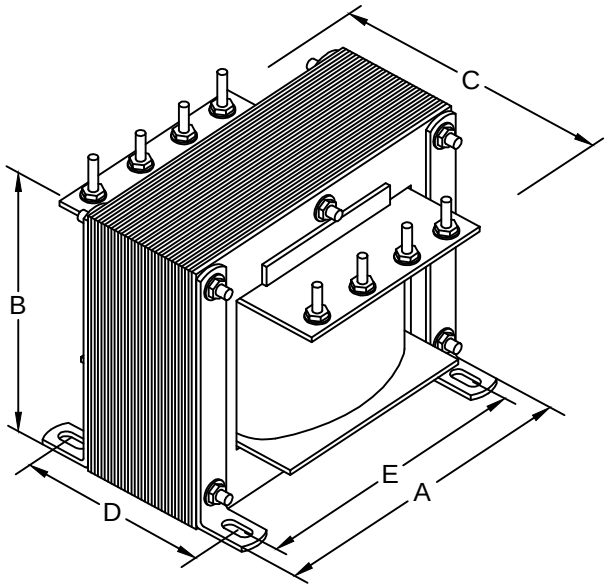

DIMENSIONS INCHES / MM

VA	A	B	C	D	E	MOUNTING HOLES INCHES / MM	SHIP WEIGHT LBS / KG
1500	7.50 190.5	6.25 158.8	6.75 171.5	3.50 88.9	6.75 171.5	0.31 x 0.688 7.9 x 17.5	36.0 16.5

Notes:

MARCUS

Marcus Transformer LTD
Phone: 1-800-267-7376
Fax: 1-866-205-7526
Email: Info@marcustransformer.com

TECHNICAL DATA
SINGLE PHASE CONTROL TRANSFORMER

DESCRIPTION

MODEL	MO1K5E
Type	Open
VA	1500
Primary (Volts)	208 / 416
Secondary (Volts)	16 / 32
Input /Output Amps	7.21 , 3.61 / 93.75 , 46.88
Temperature Rise	100°C
Insulation Class	F (155°C)
Frequency	50 / 60Hz
Polarity	additive
Noise level	less than 40DB
Winding	Copper
Approvals	CE compliant UL listed CSA approved

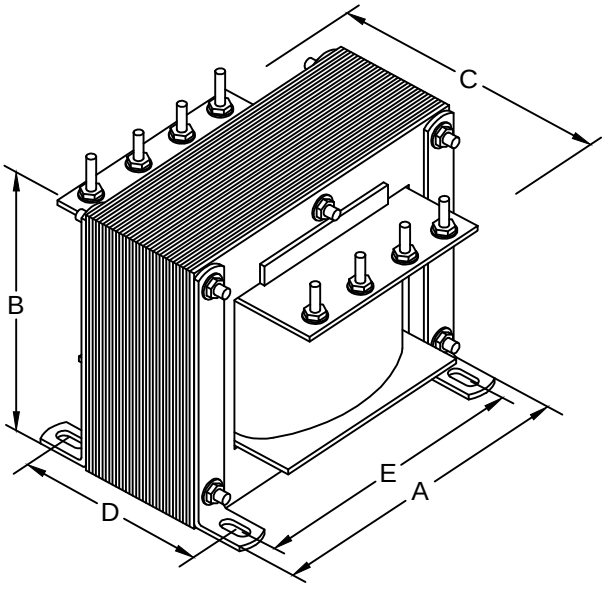

CONNECTION DIAGRAM

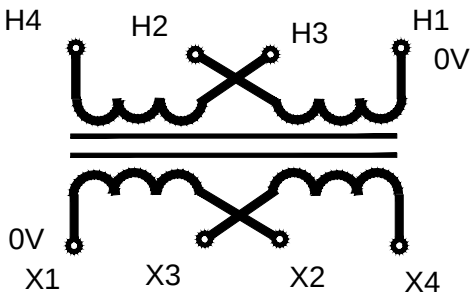

WIRING CONNECTION

PRIMARY :		
VOLTS	INTERCONNECT:	CONNECT LINES TO :
208	H1-H3 AND H2-H4	H1-H4
416	H2-H3	H1-H4
SECONDARY :		
VOLTS	INTERCONNECT:	CONNECT LINES TO :
16	X1-X3 AND X2-X4	X1-X4
32	X2-X3	X1-X4

DIMENSIONS INCHES / MM

VA	A	B	C	D	E	MOUNTING HOLES INCHES / MM	SHIP WEIGHT LBS / KG
1500	7.50 190.5	6.25 158.8	6.75 171.5	3.50 88.9	6.75 171.5	0.31 x 0.688 7.9 x 17.5	36.0 16.5

Notes:

MARCUS

Marcus Transformer LTD
Phone: 1-800-267-7376
Fax: 1-866-205-7526
Email: Info@marcustransformer.com

TECHNICAL DATA
SINGLE PHASE CONTROL TRANSFORMER

DESCRIPTION

MODEL	MO1K5F
Type	Open
VA	1500
Primary (Volts)	208 / 416
Secondary (Volts)	120 / 240
Input /Output Amps	7.21 , 3.61 / 12.5 , 6.25
Temperature Rise	100°C
Insulation Class	F (155°C)
Frequency	50 / 60Hz
Polarity	additive
Noise level	less than 40DB
Winding	Copper
Approvals	CE compliant UL listed CSA approved

CONNECTION DIAGRAM

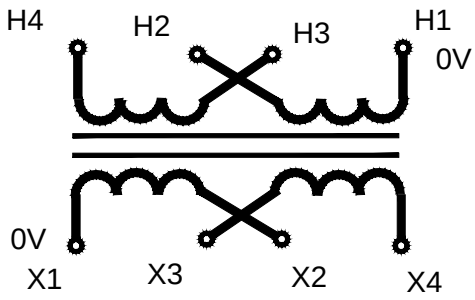

WIRING CONNECTION

PRIMARY :		
VOLTS	INTERCONNECT:	CONNECT LINES TO :
208	H1-H3 AND H2-H4	H1-H4
416	H2-H3	H1-H4
SECONDARY :		
VOLTS	INTERCONNECT:	CONNECT LINES TO :
120	X1-X3 AND X2-X4	X1-X4
240	X2-X3	X1-X4

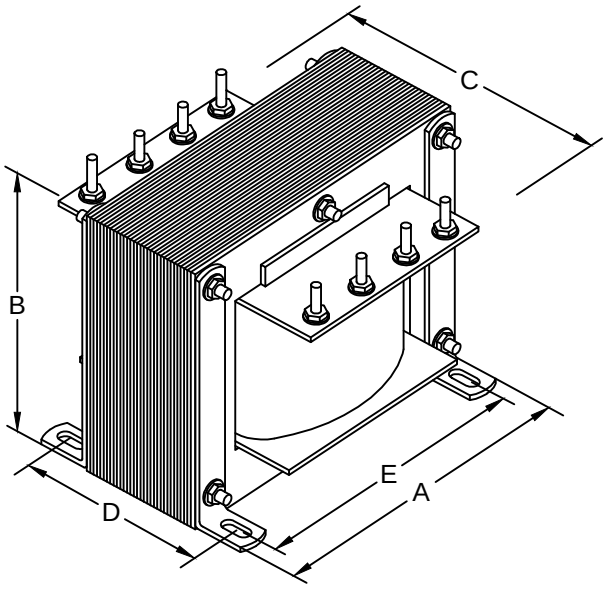

DIMENSIONS INCHES / MM

VA	A	B	C	D	E	MOUNTING HOLES INCHES / MM	SHIP WEIGHT LBS / KG
1500	7.50 190.5	6.25 158.8	6.75 171.5	3.50 88.9	6.75 171.5	0.31 x 0.688 7.9 x 17.5	36.0 16.5

Notes:

MARCUS

Marcus Transformer LTD
Phone: 1-800-267-7376
Fax: 1-866-205-7526
Email: Info@marcustransformer.com

TECHNICAL DATA
SINGLE PHASE CONTROL TRANSFORMER

DESCRIPTION

MODEL	MO1K5G
Type	Open
VA	1500
Primary (Volts)	240 / 480
Secondary (Volts)	12 / 24
Input/Output Amps	6.25 , 3.13 / 125 , 62.5
Temperature Rise	100°C
Insulation Class	F (155°C)
Frequency	60Hz
Polarity	additive
Noise level	less than 40DB
Winding	Copper
Approvals	CE compliant UL listed CSA approved

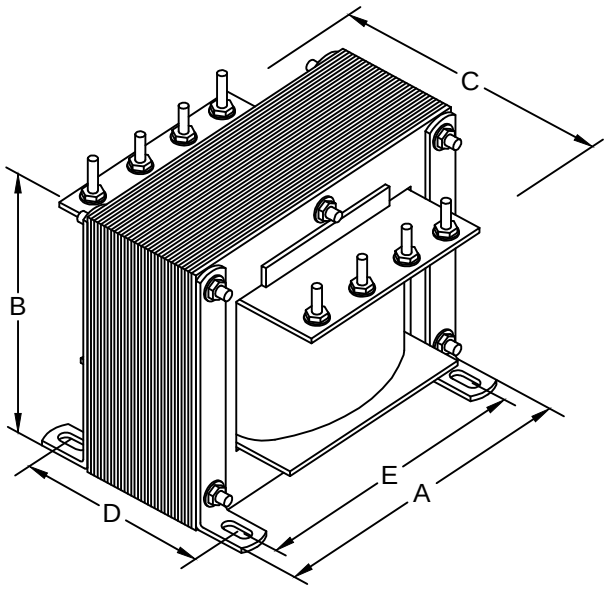

CONNECTION DIAGRAM

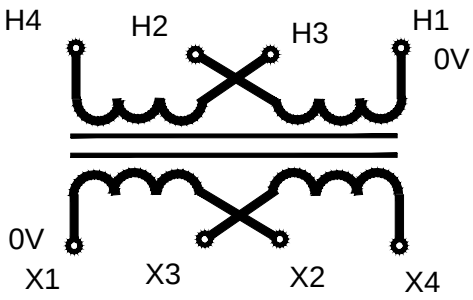

WIRING CONNECTION

PRIMARY :		
VOLTS	INTERCONNECT:	CONNECT LINES TO :
240	H1-H3 AND H2-H4	H1-H4
480	H2-H3	H1-H4
SECONDARY :		
VOLTS	INTERCONNECT:	CONNECT LINES TO :
12	X1-X3 AND X2-X4	X1-X4
24	X2-X3	X1-X4

DIMENSIONS INCHES / MM

VA	A	B	C	D	E	MOUNTING HOLES INCHES / MM	SHIP WEIGHT LBS / KG
1500	7.50 190.5	6.25 158.8	6.75 171.5	3.50 88.9	6.75 171.5	0.31 x 0.688 7.9 x 17.5	36.0 16.5

Notes:

MARCUS

Marcus Transformer LTD
Phone: 1-800-267-7376
Fax: 1-866-205-7526
Email: Info@marcustransformer.com

TECHNICAL DATA
SINGLE PHASE CONTROL TRANSFORMER

DESCRIPTION

MODEL	MO1K5H
Type	Open
VA	1500
Primary (Volts)	240 / 480
Secondary (Volts)	16 / 32
Input/Output Amps	6.25 , 3.13 / 93.75 , 46.88
Temperature Rise	100°C
Insulation Class	F (155°C)
Frequency	60Hz
Polarity	additive
Noise level	less then 40DB
Winding	Copper
Approvals	CE compliant UL listed CSA approved

CONNECTION DIAGRAM

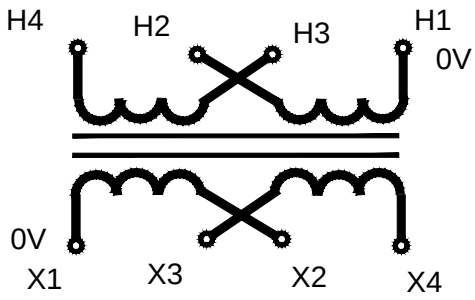

WIRING CONNECTION

PRIMARY :		
VOLTS	INTERCONNECT:	CONNECT LINES TO :
240	H1-H3 AND H2-H4	H1-H4
480	H2-H3	H1-H4
SECONDARY :		
VOLTS	INTERCONNECT:	CONNECT LINES TO :
16	X1-X3 AND X2-X4	X1-X4
32	X2-X3	X1-X4

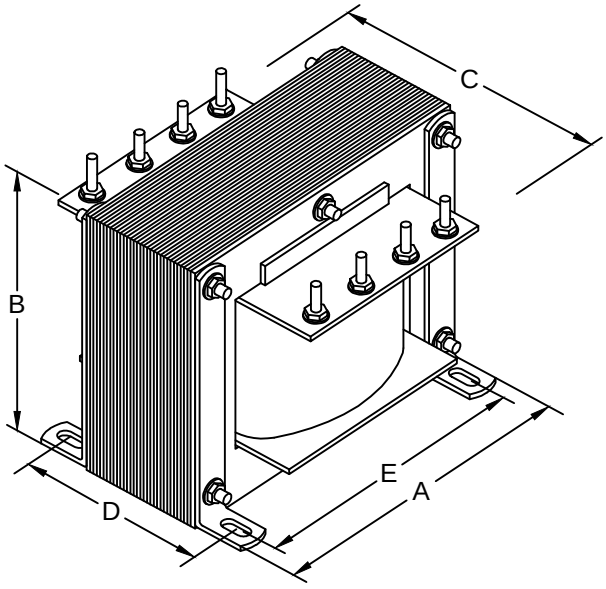

DIMENSIONS INCHES / MM

VA	A	B	C	D	E	MOUNTING HOLES INCHES / MM	SHIP WEIGHT LBS / KG
1500	7.50 190.5	6.25 158.8	6.75 171.5	3.50 88.9	6.75 171.5	0.31 x 0.688 7.9 x 17.5	36.0 16.5

Notes:

MARCUS

Marcus Transformer LTD
Phone: 1-800-267-7376
Fax: 1-866-205-7526
Email: Info@marcustransformer.com

TECHNICAL DATA
SINGLE PHASE CONTROL TRANSFORMER

DESCRIPTION

MODEL	MO1K5I
Type	Open
VA	1500
Primary (Volts)	240 / 480
Secondary (Volts)	120 / 240
Input /Output Amps	6.25 , 3.13 / 12.5 , 6.25
Temperature Rise	100°C
Insulation Class	F (155°C)
Frequency	60Hz
Polarity	additive
Noise level	less than 40DB
Winding	Copper
Approvals	CE compliant UL listed CSA approved

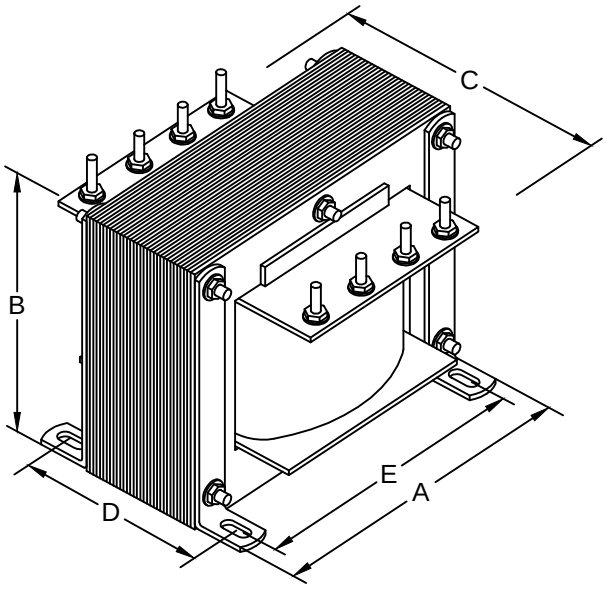

CONNECTION DIAGRAM

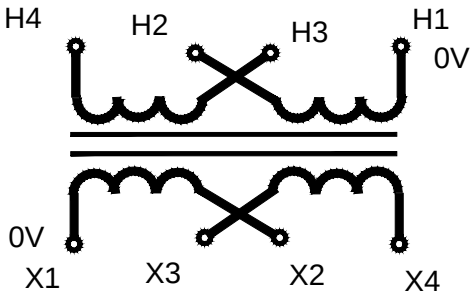

WIRING CONNECTION

PRIMARY :		
VOLTS	INTERCONNECT:	CONNECT LINES TO :
240	H1-H3 AND H2-H4	H1-H4
480	H2-H3	H1-H4
SECONDARY :		
VOLTS	INTERCONNECT:	CONNECT LINES TO :
120	X1-X3 AND X2-X4	X1-X4
240	X2-X3	X1-X4

DIMENSIONS INCHES / MM

VA	A	B	C	D	E	MOUNTING HOLES INCHES / MM	SHIP WEIGHT LBS / KG
1500	7.50 190.5	6.25 158.8	6.75 171.5	3.50 88.9	6.75 171.5	0.31 x 0.688 7.9 x 17.5	36.0 16.5

Notes:

MARCUS

Marcus Transformer LTD
Phone: 1-800-267-7376
Fax: 1-866-205-7526
Email: Info@marcustransformer.com

TECHNICAL DATA
SINGLE PHASE CONTROL TRANSFORMER

DESCRIPTION

MODEL	MO1K5J
Type	Open
VA	1500
Primary (Volts)	277
Secondary (Volts)	120 / 240
Input /Output Amps	5.42 / 12.5 , 6.25
Temperature Rise	100°C
Insulation Class	F (155°C)
Frequency	60Hz
Polarity	additive
Noise level	less than 40DB
Winding	Copper
Approvals	CE compliant UL listed CSA approved

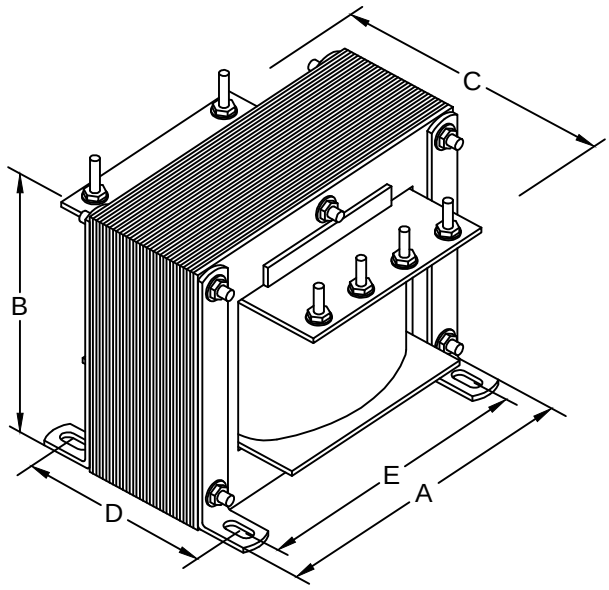

CONNECTION DIAGRAM

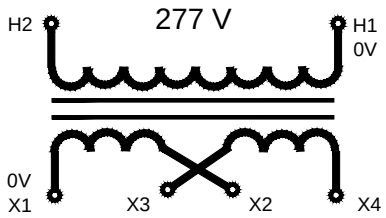

WIRING CONNECTION

PRIMARY :	
VOLTS 277	CONNECT LINES TO : H1-H2

SECONDARY :		
VOLTS	INTERCONNECT:	CONNECT LINES TO :
120	X1-X3 AND X2-X4	X1-X4
240	X2-X3	X1-X4
120/240	X2-X3	X1-X3-X4

DIMENSIONS INCHES / MM

VA	A	B	C	D	E	MOUNTING HOLES INCHES / MM	SHIP WEIGHT LBS / KG
1500	7.50 190.5	6.25 158.8	6.75 171.5	3.50 88.9	6.75 171.5	0.31 x 0.688 7.9 x 17.5	36.0 16.5

Notes:

MARCUS

Marcus Transformer LTD
Phone: 1-800-267-7376
Fax: 1-866-205-7526
Email: Info@marcustransformer.com

TECHNICAL DATA
SINGLE PHASE CONTROL TRANSFORMER

DESCRIPTION

MODEL	MO1K5K
Type	Open
VA	1500
Primary (Volts)	347 / 380
Secondary (Volts)	12 / 24
Input/Output Amps	4.32 , 3.95 / 125.0, 62.5
Temperature Rise	100°C
Insulation Class	F (155°C)
Frequency	50 / 60Hz
Polarity	additive
Noise level	less than 40DB
Winding	Copper
Approvals	CE compliant UL listed CSA approved

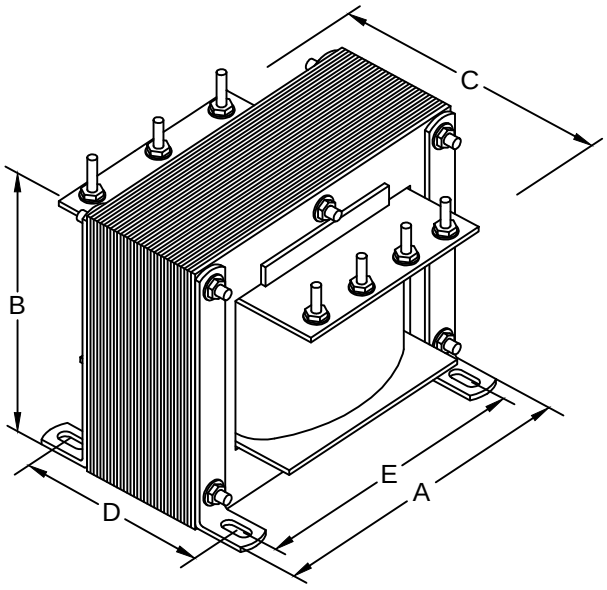

Primary Tabs

Pos.	H1	H2	H3				
Volts	0V	347	380				

CONNECTION DIAGRAM

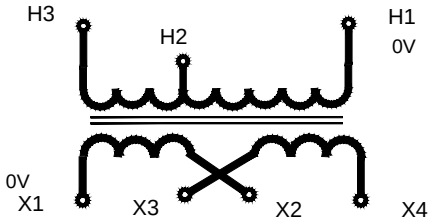

WIRING CONNECTION

PRIMARY :

VOLTS	CONNECT LINES TO :
347	H1-H2
380	H1-H3

SECONDARY :

VOLTS	INTERCONNECT:	CONNECT LINES TO :
12	X1-X3 AND X2-X4	X1-X4
24	X2-X3	X1-X4

DIMENSIONS INCHES / MM

VA	A	B	C	D	E	MOUNTING HOLES INCHES / MM	SHIP WEIGHT LBS / KG
1500	7.50 190.5	6.25 158.8	6.75 171.5	3.50 88.9	6.75 171.5	0.31 x 0.688 7.9 x 17.5	36.0 16.5

Notes:

MARCUS

Marcus Transformer LTD
Phone: 1-800-267-7376
Fax: 1-866-205-7526
Email: Info@marcustransformer.com

TECHNICAL DATA
SINGLE PHASE CONTROL TRANSFORMER

DESCRIPTION

MODEL	MO1K5L
Type	Open
VA	1500
Primary (Volts)	347 / 380
Secondary (Volts)	16 / 32
Input / Output Amps	4.32 , 3.95 / 93.75 , 46.88
Temperature Rise	100°C
Insulation Class	F (155°C)
Frequency	50 / 60Hz
Polarity	additive
Noise level	less than 40DB
Winding	Copper
Approvals	CE compliant UL listed CSA approved

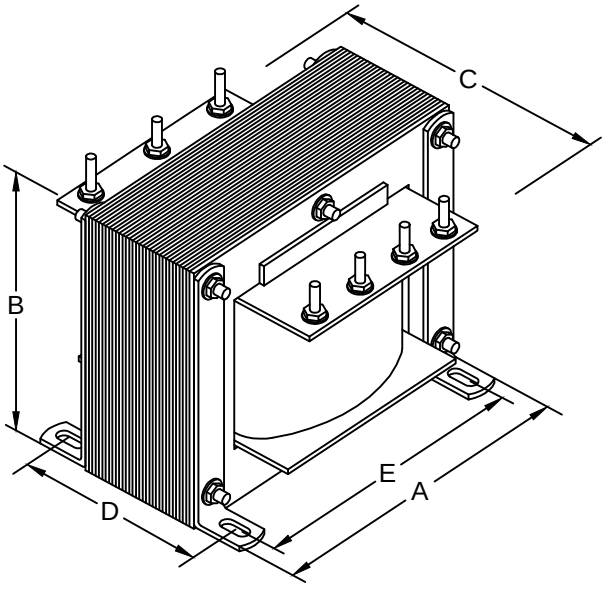

Primary Tabs

Pos.	H1	H2	H3				
Volts	0V	347	380				

CONNECTION DIAGRAM

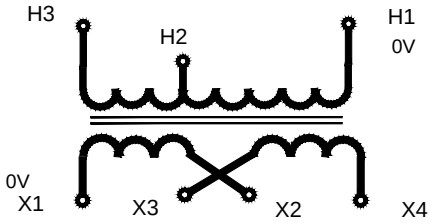

WIRING CONNECTION

PRIMARY :

VOLTS	CONNECT LINES TO :
347	H1-H2
380	H1-H3

SECONDARY :

VOLTS	INTERCONNECT:	CONNECT LINES TO :
16	X1-X3 AND X2-X4	X1-X4
32	X2-X3	X1-X4

DIMENSIONS INCHES / MM

VA	A	B	C	D	E	MOUNTING HOLES INCHES / MM	SHIP WEIGHT LBS / KG
1500	7.50 190.5	6.25 158.8	6.75 171.5	3.50 88.9	6.75 171.5	0.31 x 0.688 7.9 x 17.5	36.0 16.5

Notes:

MARCUS

Marcus Transformer LTD
Phone: 1-800-267-7376
Fax: 1-866-205-7526
Email: Info@marcustransformer.com

TECHNICAL DATA
SINGLE PHASE CONTROL TRANSFORMER

DESCRIPTION

MODEL	MO1K5M
Type	Open
VA	1500
Primary (Volts)	347 / 380
Secondary (Volts)	120 / 240
Input / Output Amps	4.32 , 3.95 / 12.5 , 62.5
Temperature Rise	100°C
Insulation Class	F (155°C)
Frequency	50 / 60Hz
Polarity	additive
Noise level	less than 40DB
Winding	Copper
Approvals	CE compliant UL listed CSA approved

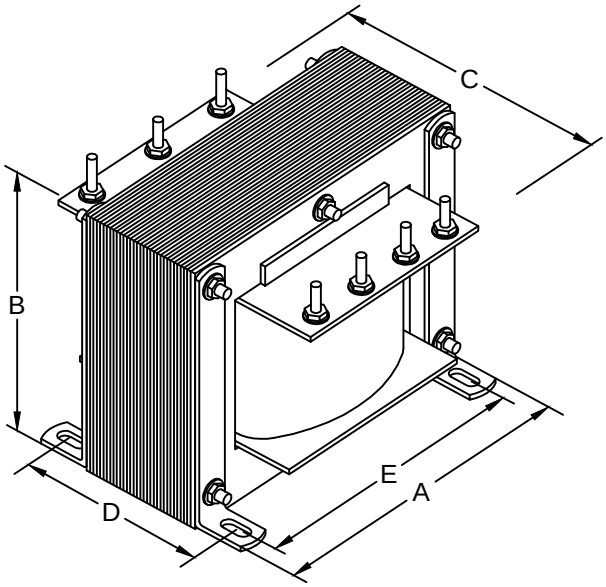

Primary Tabs

Pos.	H1	H2	H3				
Volts	0V	347	380				

CONNECTION DIAGRAM

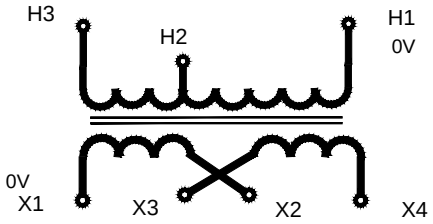

WIRING CONNECTION

PRIMARY :

VOLTS	CONNECT LINES TO :
347	H1-H2
380	H1-H3

SECONDARY :

VOLTS	INTERCONNECT:	CONNECT LINES TO :
120	X1-X3 AND X2-X4	X1-X4
240	X2-X3	X1-X4

DIMENSIONS INCHES / MM

VA	A	B	C	D	E	MOUNTING HOLES INCHES / MM	SHIP WEIGHT LBS / KG
1500	7.50 190.5	6.25 158.8	6.75 171.5	3.50 88.9	6.75 171.5	0.31 x 0.688 7.9 x 17.5	36.0 16.5

Notes:

MARCUS

Marcus Transformer LTD
Phone: 1-800-267-7376
Fax: 1-866-205-7526
Email: Info@marcustransformer.com

TECHNICAL DATA
SINGLE PHASE CONTROL TRANSFORMER

DESCRIPTION

MODEL	MO1K5N
Type	Open
VA	1500
Primary (Volts)	600
Secondary (Volts)	12 / 24
Input /Output Amps	2.50 / 125.0 , 62.5
Temperature Rise	100°C
Insulation Class	F (155°C)
Frequency	60Hz
Polarity	additive
Noise level	less than 40DB
Winding	Copper
Approvals	CE compliant UL listed CSA approved

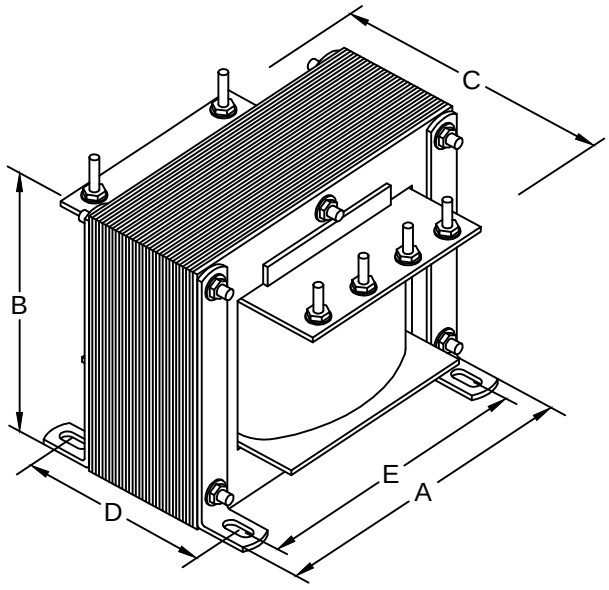

CONNECTION DIAGRAM

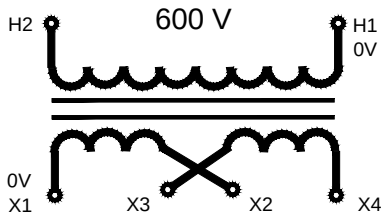

WIRING CONNECTION

PRIMARY :	
VOLTS 600	CONNECT LINES TO : H1-H2

SECONDARY :		
VOLTS	INTERCONNECT:	CONNECT LINES TO :
12	X1-X3 AND X2-X4	X1-X4
24	X2-X3	X1-X4
12/24	X2-X3	X1-X3-X4

DIMENSIONS INCHES / MM

VA	A	B	C	D	E	MOUNTING HOLES INCHES / MM	SHIP WEIGHT LBS / KG
1500	7.50 190.5	6.25 158.8	6.75 171.5	3.50 88.9	6.75 171.5	0.31 x 0.688 7.9 x 17.5	36.0 16.5

Notes:

MARCUS

Marcus Transformer LTD
Phone: 1-800-267-7376
Fax: 1-866-205-7526
Email: Info@marcustransformer.com

TECHNICAL DATA
SINGLE PHASE CONTROL TRANSFORMER

DESCRIPTION

MODEL	MO1K5O
Type	Open
VA	1500
Primary (Volts)	600
Secondary (Volts)	16 / 32
Input /Output Amps	2.50 / 93.75 , 46.88
Temperature Rise	100°C
Insulation Class	F (155°C)
Frequency	60Hz
Polarity	additive
Noise level	less than 40DB
Winding	Copper
Approvals	CE compliant UL listed CSA approved

CONNECTION DIAGRAM

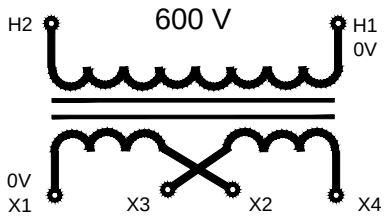

WIRING CONNECTION

PRIMARY :	
VOLTS 600	CONNECT LINES TO : H1-H2

SECONDARY :		
VOLTS	INTERCONNECT:	CONNECT LINES TO :
16	X1-X3 AND X2-X4	X1-X4
32	X2-X3	X1-X4
16/32	X2-X3	X1-X3-X4

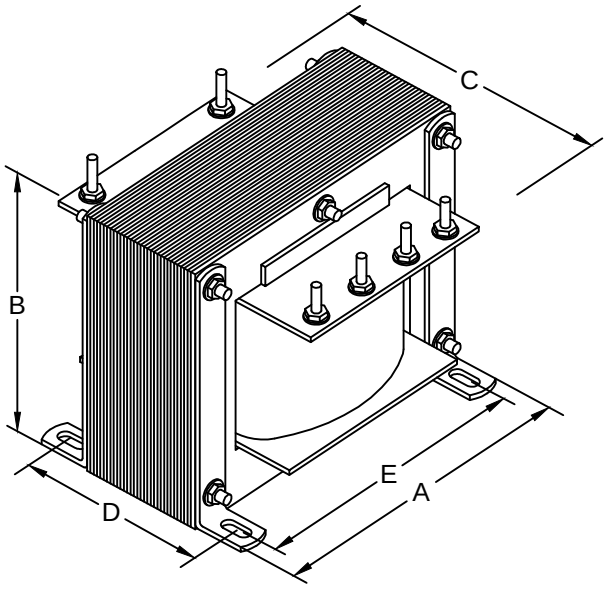

DIMENSIONS INCHES / MM

VA	A	B	C	D	E	MOUNTING HOLES INCHES / MM	SHIP WEIGHT LBS / KG
1500	7.50 190.5	6.25 158.8	6.75 171.5	3.50 88.9	6.75 171.5	0.31 x 0.688 7.9 x 17.5	36.0 16.5

Notes:

MARCUS

Marcus Transformer LTD
Phone: 1-800-267-7376
Fax: 1-866-205-7526
Email: Info@marcustransformer.com

TECHNICAL DATA
SINGLE PHASE CONTROL TRANSFORMER

DESCRIPTION

MODEL	MO1K5P
Type	Open
VA	1500
Primary (Volts)	600
Secondary (Volts)	120 / 240
Input /Output Amps	2.50 / 12.5 , 6.25
Temperature Rise	100°C
Insulation Class	F (155°C)
Frequency	60Hz
Polarity	additive
Noise level	less than 40DB
Winding	Copper
Approvals	CE compliant UL listed CSA approved

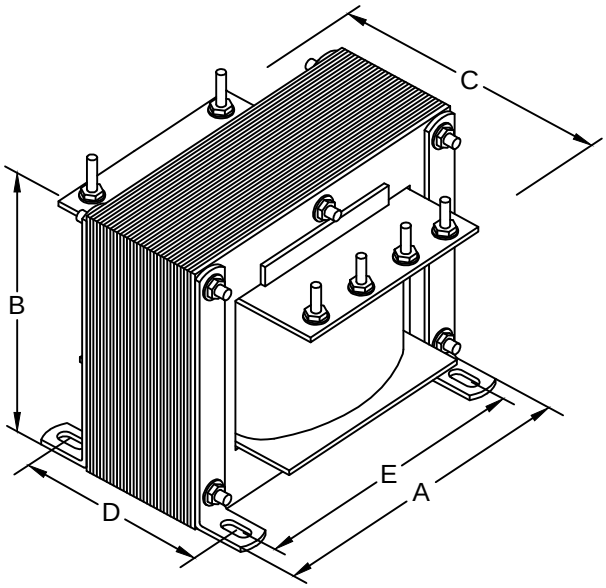

CONNECTION DIAGRAM

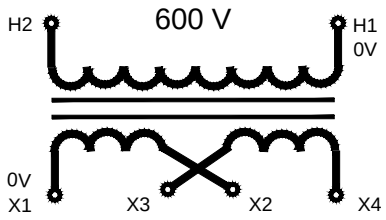

WIRING CONNECTION

PRIMARY :	
VOLTS 600	CONNECT LINES TO : H1-H2

SECONDARY :		
VOLTS	INTERCONNECT:	CONNECT LINES TO :
120	X1-X3 AND X2-X4	X1-X4
240	X2-X3	X1-X4
120/240	X2-X3	X1-X3-X4

DIMENSIONS INCHES / MM

VA	A	B	C	D	E	MOUNTING HOLES INCHES / MM	SHIP WEIGHT LBS / KG
1500	7.50 190.5	6.25 158.8	6.75 171.5	3.50 88.9	6.75 171.5	0.31 x 0.688 7.9 x 17.5	36.0 16.5

Notes:

MARCUS

Marcus Transformer LTD
Phone: 1-800-267-7376
Fax: 1-866-205-7526
Email: Info@marcustransformer.com

TECHNICAL DATA
SINGLE PHASE CONTROL TRANSFORMER

DESCRIPTION

MODEL	MO1K5R
Type	Open
VA	1500
Primary (Volts)	208
Secondary (Volts)	120
Input /Output Amps	7.21 / 12.5
Temperature Rise	100°C
Insulation Class	F (155°C)
Frequency	60Hz
Polarity	additive
Noise level	less than 40DB
Winding	Copper
Approvals	CE compliant UL listed CSA approved

CONNECTION DIAGRAM

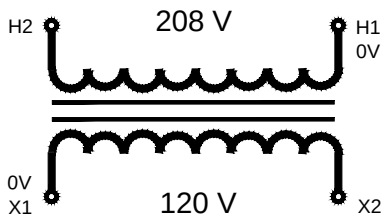

WIRING CONNECTION

PRIMARY :	
VOLTS 208	CONNECT LINES TO : H1-H2
SECONDARY :	
VOLTS 120	CONNECT LINES TO : X1-X2

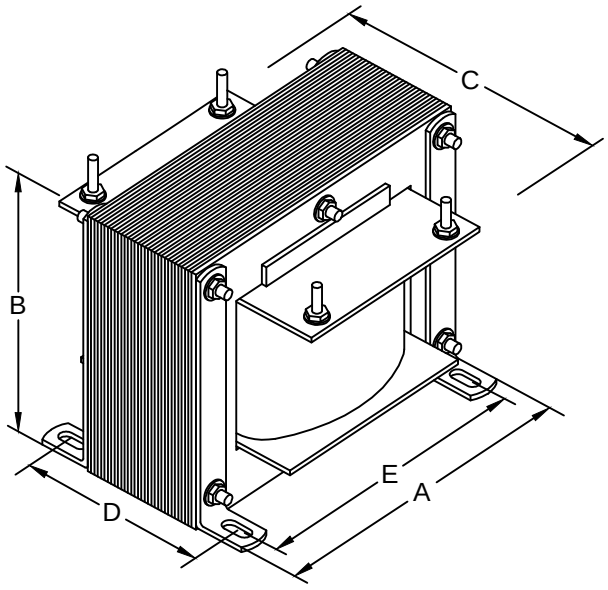

DIMENSIONS INCHES / MM

VA	A	B	C	D	E	MOUNTING HOLES INCHES / MM	SHIP WEIGHT LBS / KG
1500	7.50 190.5	6.25 158.8	6.75 171.5	3.50 88.9	6.75 171.5	0.31 x 0.688 7.9 x 17.5	36.0 16.5

Notes:

MARCUS

Marcus Transformer LTD
Phone: 1-800-267-7376
Fax: 1-866-205-7526
Email: Info@marcustransformer.com

TECHNICAL DATA
SINGLE PHASE CONTROL TRANSFORMER

DESCRIPTION

MODEL	MO1K5S
Type	Open
VA	1500
Primary (Volts)	240
Secondary (Volts)	120
Input /Output Amps	6.25 / 12.5
Temperature Rise	100°C
Insulation Class	F (155°C)
Frequency	60Hz
Polarity	additive
Noise level	less than 40DB
Winding	Copper
Approvals	CE compliant UL listed CSA approved

CONNECTION DIAGRAM

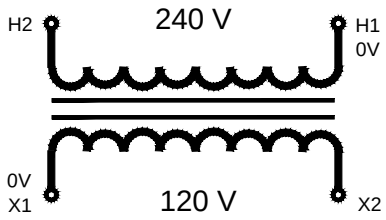

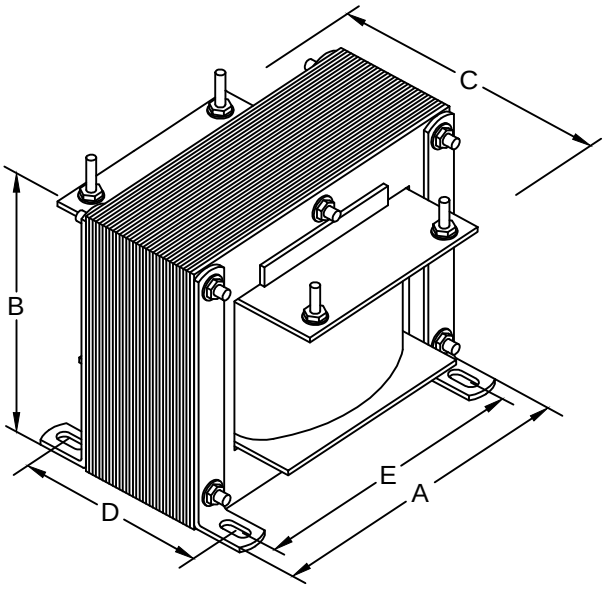

WIRING CONNECTION

PRIMARY :	
VOLTS 240	CONNECT LINES TO : H1-H2
SECONDARY :	
VOLTS 120	CONNECT LINES TO : X1-X2

DIMENSIONS INCHES / MM

VA	A	B	C	D	E	MOUNTING HOLES INCHES / MM	SHIP WEIGHT LBS / KG
1500	7.50 190.5	6.25 158.8	6.75 171.5	3.50 88.9	6.75 171.5	0.31 x 0.688 7.9 x 17.5	36.0 16.5

Notes:

MARCUS

Marcus Transformer LTD
Phone: 1-800-267-7376
Fax: 1-866-205-7526
Email: Info@marcustransformer.com

TECHNICAL DATA
SINGLE PHASE CONTROL TRANSFORMER

DESCRIPTION

MODEL	MO1K5T
Type	Open
VA	1500
Primary (Volts)	347
Secondary (Volts)	120
Input /Output Amps	4.32 / 12.5
Temperature Rise	100°C
Insulation Class	F (155°C)
Frequency	60Hz
Polarity	additive
Noise level	less than 40DB
Winding	Copper
Approvals	CE compliant UL listed CSA approved

CONNECTION DIAGRAM

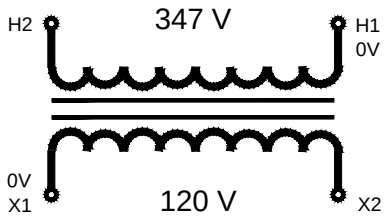

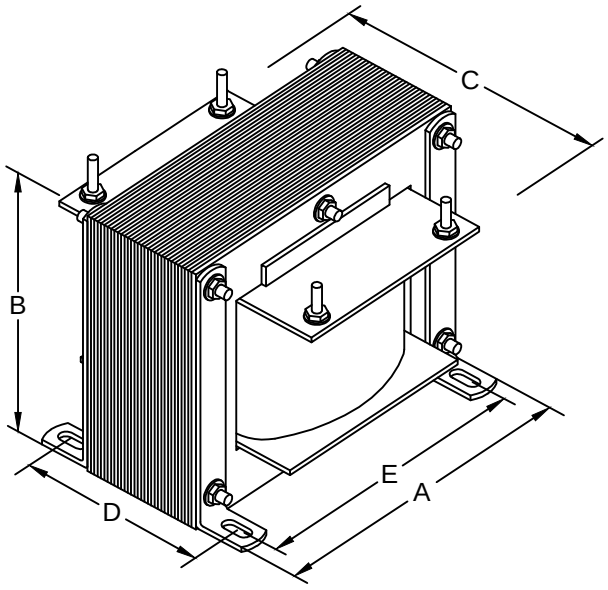

WIRING CONNECTION

PRIMARY :	
VOLTS 347	CONNECT LINES TO : H1-H2
SECONDARY :	
VOLTS 120	CONNECT LINES TO : X1-X2

DIMENSIONS INCHES / MM

VA	A	B	C	D	E	MOUNTING HOLES INCHES / MM	SHIP WEIGHT LBS / KG
1500	7.50 190.5	6.25 158.8	6.75 171.5	3.50 88.9	6.75 171.5	0.31 x 0.688 7.9 x 17.5	36.0 16.5

Notes:

MARCUS

Marcus Transformer LTD
Phone: 1-800-267-7376
Fax: 1-866-205-7526
Email: Info@marcustransformer.com

TECHNICAL DATA
SINGLE PHASE CONTROL TRANSFORMER

DESCRIPTION

MODEL	MO1K5U
Type	Open
VA	1500
Primary (Volts)	480
Secondary (Volts)	120
Input /Output Amps	3.13 / 12.5
Temperature Rise	100°C
Insulation Class	F (155°C)
Frequency	60Hz
Polarity	additive
Noise level	less than 40DB
Winding	Copper
Approvals	CE compliant UL listed CSA approved

CONNECTION DIAGRAM

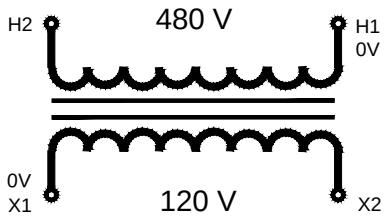

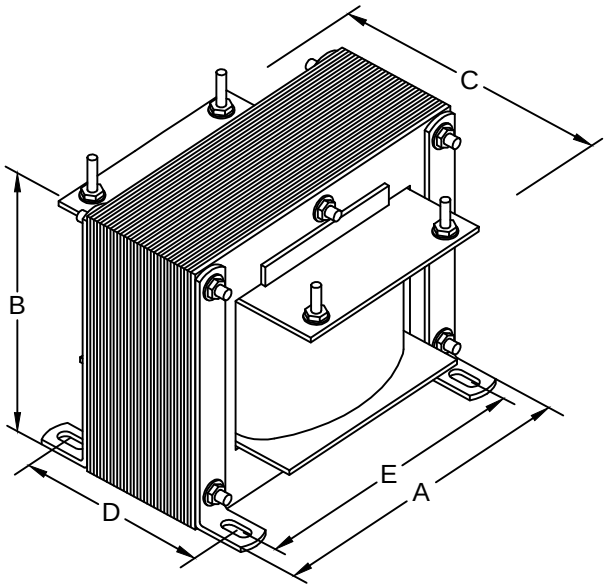

WIRING CONNECTION

PRIMARY :	
VOLTS 480	CONNECT LINES TO : H1-H2
SECONDARY :	
VOLTS 120	CONNECT LINES TO : X1-X2

DIMENSIONS INCHES / MM

VA	A	B	C	D	E	MOUNTING HOLES INCHES / MM	SHIP WEIGHT LBS / KG
1500	7.50 190.5	6.25 158.8	6.75 171.5	3.50 88.9	6.75 171.5	0.31 x 0.688 7.9 x 17.5	36.0 16.5

Notes:

MARCUS

Marcus Transformer LTD
Phone: 1-800-267-7376
Fax: 1-866-205-7526
Email: Info@marcustransformer.com

TECHNICAL DATA
SINGLE PHASE CONTROL TRANSFORMER

DESCRIPTION

MODEL	MO1K5V
Type	Open
VA	1500
Primary (Volts)	600
Secondary (Volts)	120
Input /Output Amps	2.50 / 12.5
Temperature Rise	100°C
Insulation Class	F (155°C)
Frequency	60Hz
Polarity	additive
Noise level	less than 40DB
Winding	Copper
Approvals	CE compliant UL listed CSA approved

CONNECTION DIAGRAM

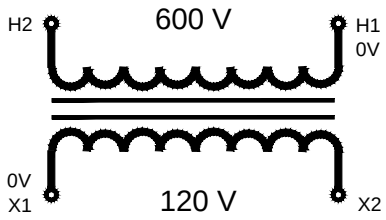

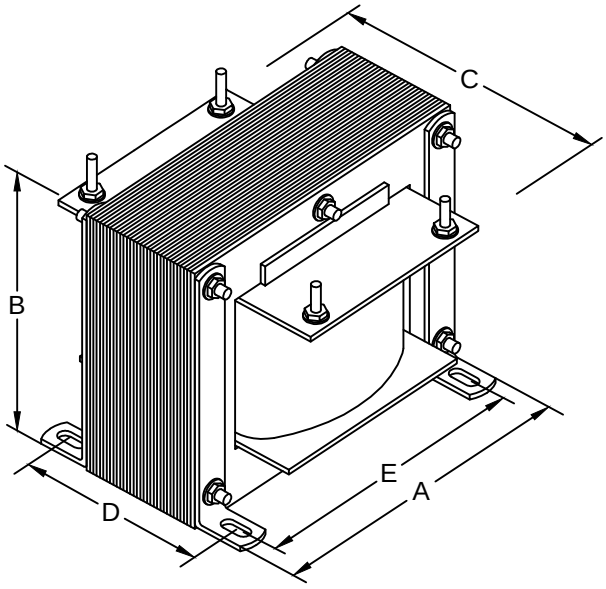

WIRING CONNECTION

PRIMARY :	
VOLTS 600	CONNECT LINES TO : H1-H2
SECONDARY :	
VOLTS 120	CONNECT LINES TO : X1-X2

DIMENSIONS INCHES / MM

VA	A	B	C	D	E	MOUNTING HOLES INCHES / MM	SHIP WEIGHT LBS / KG
1500	7.50 190.5	6.25 158.8	6.75 171.5	3.50 88.9	6.75 171.5	0.31 x 0.688 7.9 x 17.5	36.0 16.5

Notes: